XDR Hands Free System

Technical Specifications

An introduction to the XDR Hands Free System (HFS). The system is designed to allow the tripping of tubulars in and out of the well. It is comprised of 5 main components which work together to enable the processing of the tubulars. The system is comprised of the 5 following items:

The Nautilus and Nautili
The Make & Break (“Rotary table”)
The Aligner
The Mantis
Slips

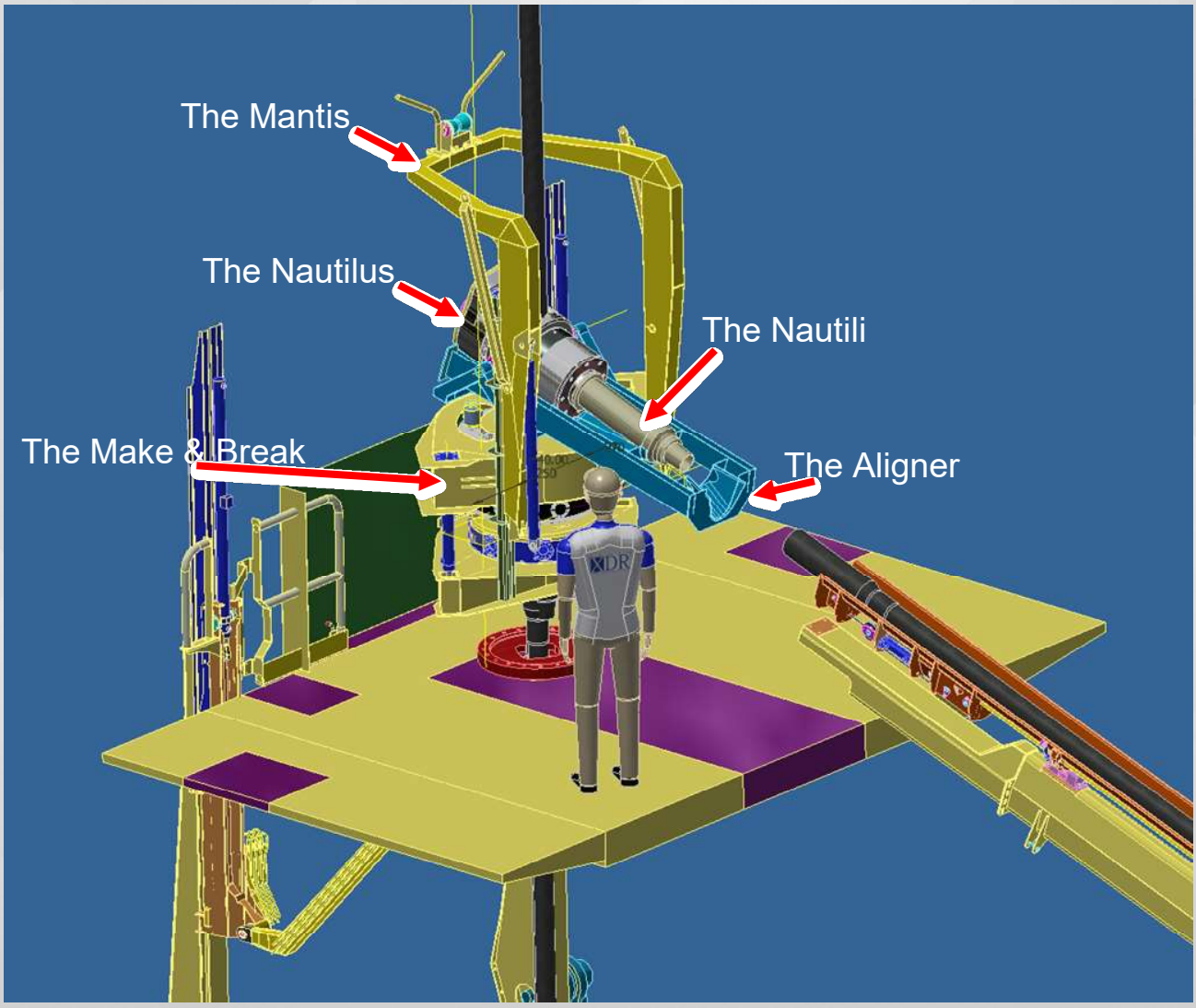

Copyright© 2021 Exploration Drill Rigs Pty Ltd

XDR Hands Free System

Technical Specifications

The Nautilus is attached to the drill line using the Bullhorn. It is raised and lowered with the drawworks.

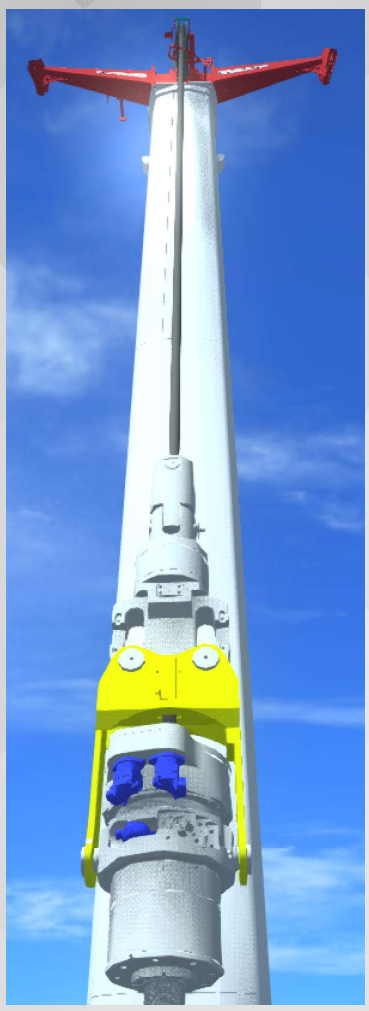

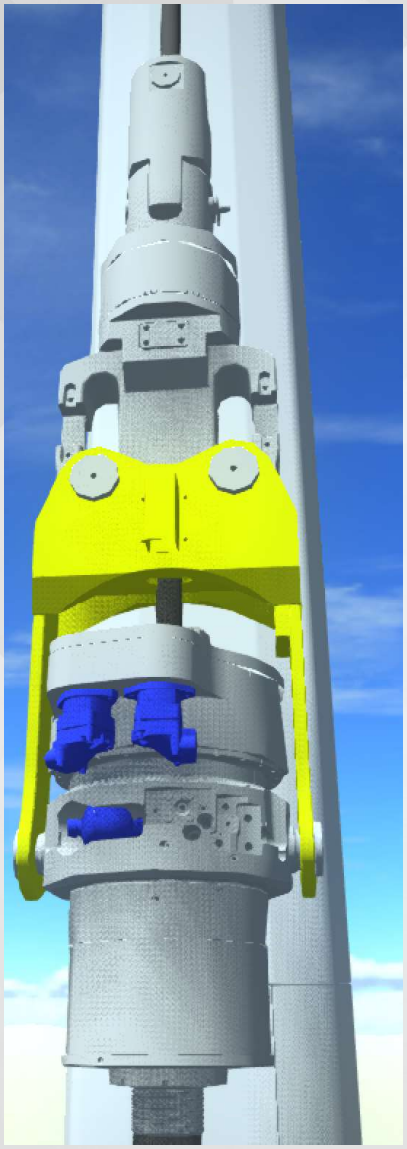

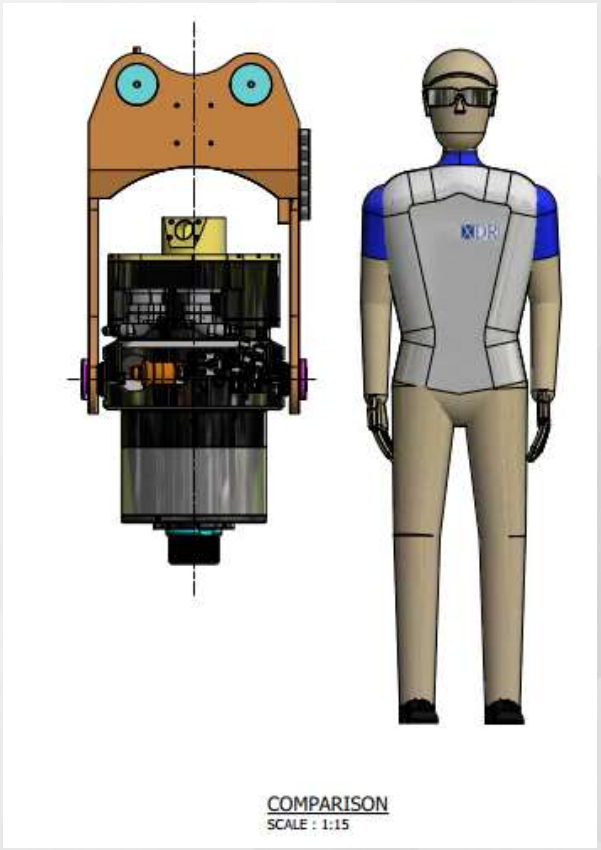

The Nautilus Technical Specifications.

Nautilus	Unit	Value
Maximum Lifting Capacity	kg	50,000
Maximum Threading Torque	N.m	100
Maximum Tensioning force	kN	500
Maximum Time to engage thread	s	5
Maximum Rotation Speed	rpm	100
Maximum Rotation Torque	N.m	200

Copyright© 2021 Exploration Drill Rigs Pty Ltd

XDR Hands Free System

Technical Specifications

The Nautili is the nose sub of the Nautilus. It is a specific size and needs to be changed according to the pipe size you are tripping. Its purpose and principal use is to engage with the pipe to make connections.

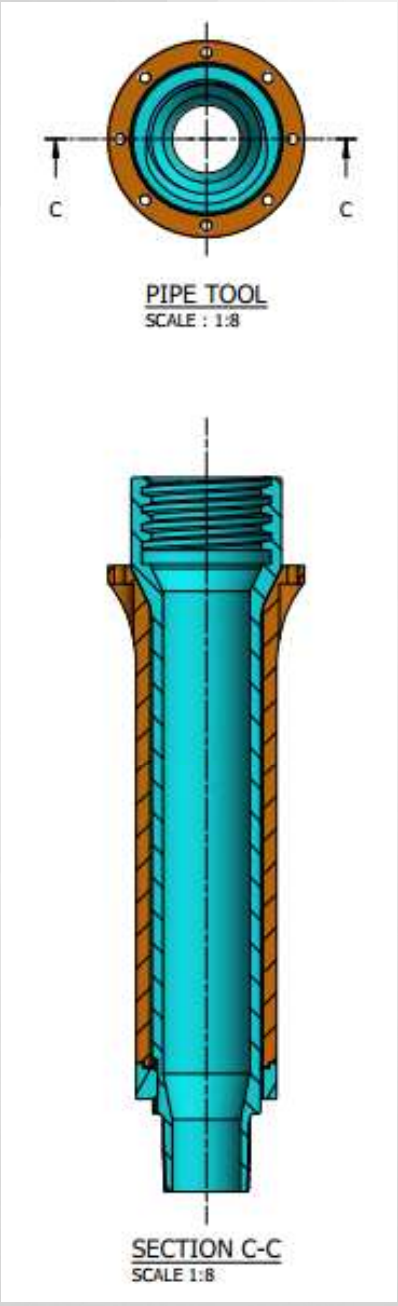

Copyright© 2021 Exploration Drill Rigs Pty Ltd

XDR Hands Free System

Technical Specifications

The Make & Break(MB) is made of an upper and lower section. The upper rotary part does all the rotation and the lower section is for gripping the lower pipe. All the weight of the drill string is taken by the slips. A smaller version of the M&B has been made and works as designed. The Make & Break is currently in fabrication

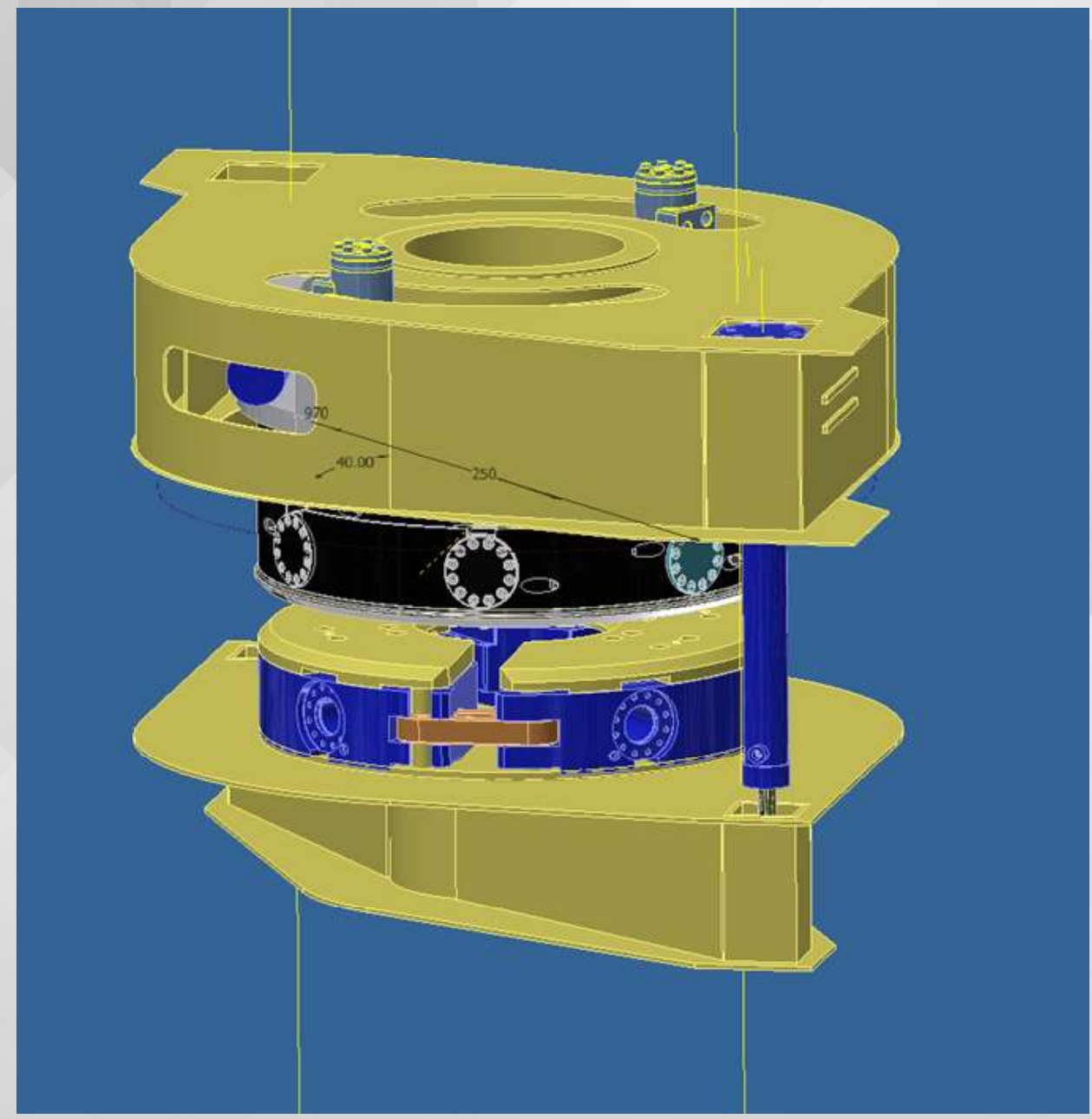

Will run 4.5in drill pipe to 2 7/8 tubing without jaw replacement
Distance between upper and lower chucks is 800mm to allow for ESP cable banding.

Copyright© 2021 Exploration Drill Rigs Pty Ltd

XDR Hands Free System

Technical Specifications

The Make & Break(MB) is made of an upper and lower section. The upper rotary part does all the rotation and the lower section is for gripping the lower pipe. All the weight of the drill string is taken by the slips. A smaller version of the M&B has been made and works as designed.

Make @ Break		
Operating Torque @ 3 1/2" Tubing	ft.lbf	7,624
	N.m	10,337
Gorilla Mode @ 3 ½" Tubing	ft.lbf	18,439
	N.m	25,000
Nominal Torque @ 4 1/2" Drill Pipe	ft.lb	15,000
	N.m	20,337
Gorilla Mode @ 4 1/2" Drill Pipe	ft.lb	35,000
	N.m	47,454
Chuck Max Rotating Speed	rpm	60
Chuck Clearance Diameter	mm	250
Operational Clamping Force	kN	242
Maximum Clamp Force (Gorilla mode)	kN	565
Max time to open/close (Full stroke)	s	1.5
Max time to thread/unthread Joint	s	5

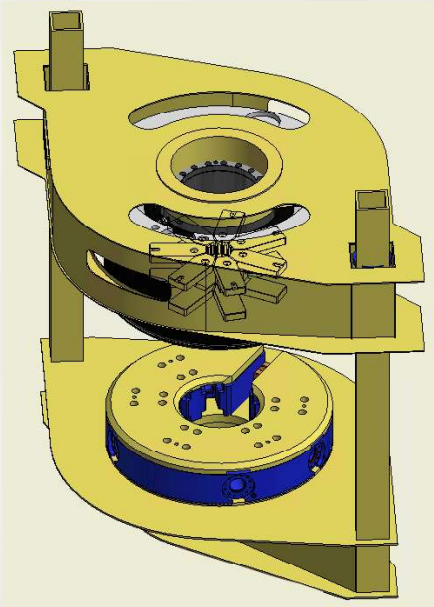

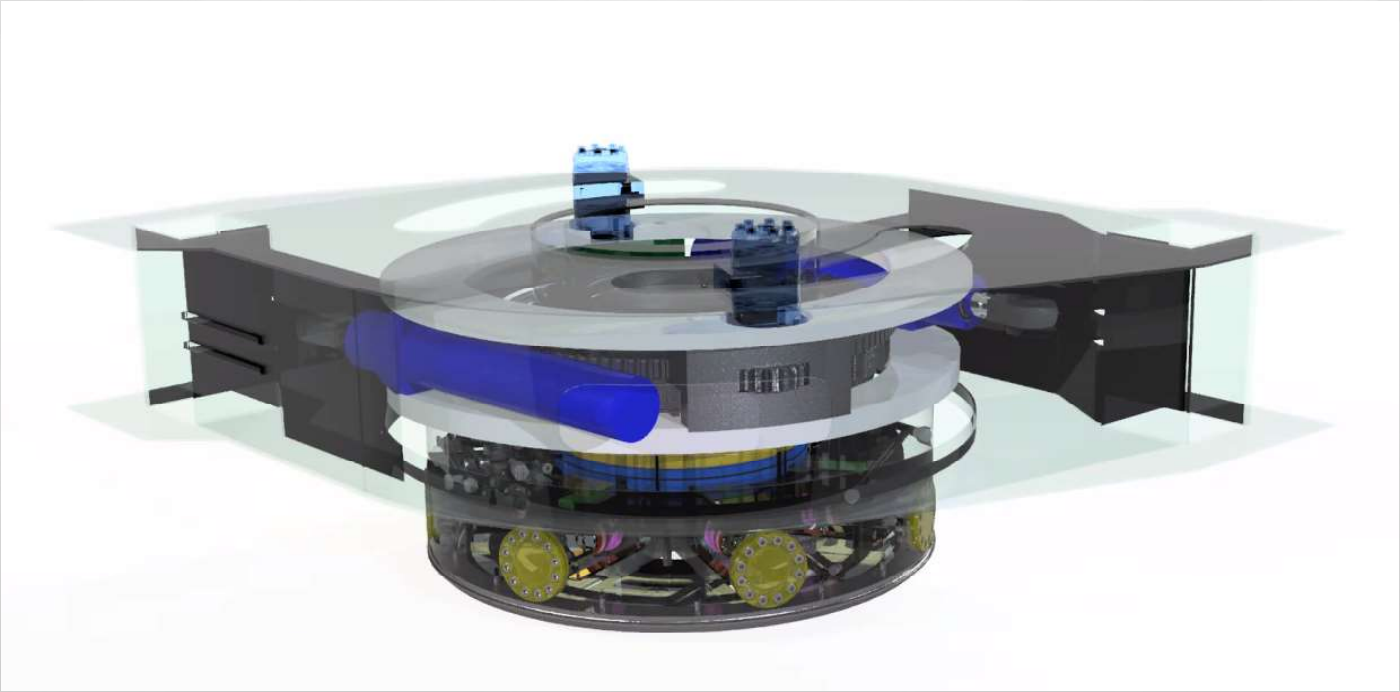

Copyright© 2021 Exploration Drill Rigs Pty Ltd